THORN

UK	Installation instructions	**FI**	Asennusohje	**LV**	Instalacijas instrukcija
DE	Montageanleitung	**FR**	Notice de montage	**NO**	Monteringsanvisning
CZ	Montážní návod	**HU**	Szerelési útmutató	**PL**	Instrukcja montazu
DK	Monteringsvejledning	**IT**	Istruzioni di montaggio	**SE**	Installationsanvisning
EE	Paigaldusjuhend	**LT**	Montavimo Instrukcijos	**RU**	ИНСТРУКЦИЯ ПО МОНТАЖУ

TYPE : ALTIS LED 132L-264L-396L

The luminaire with clear optic should be positioned so that prolonged staring into the luminaire at a distance <2m is not expected

Caution, risk of electric shock
Danger, risque de chocs électriques

Direct lighting

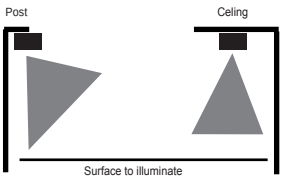

Indirect lighting

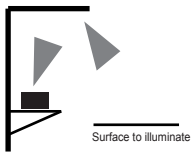

ALTIS LED 132L

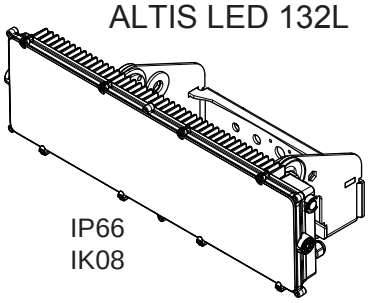

IP66
IK08

ALTIS LED 264L

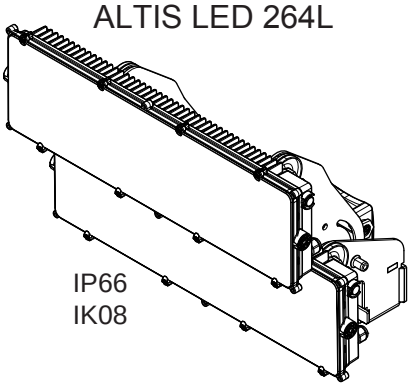

IP66
IK08

ALTIS LED 396L

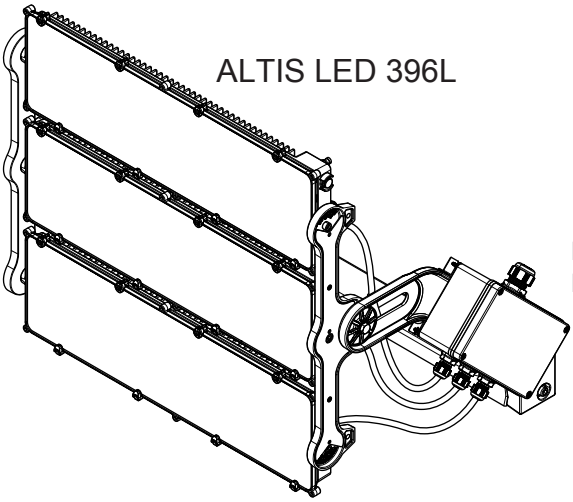

IP66
IK08

Gear box 264L / 396L

ta -40°
ta +45°

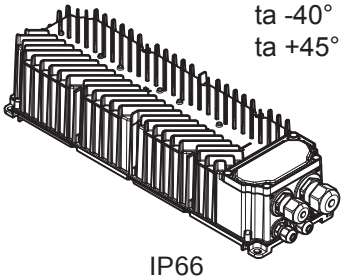

IP66
IK08

LED

CLASS I

7/22/24/33/36/42

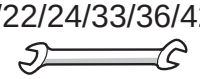

2,5 4 6 8

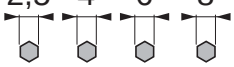

± PH3

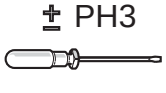

1

Gear box IP66
264L / 396L

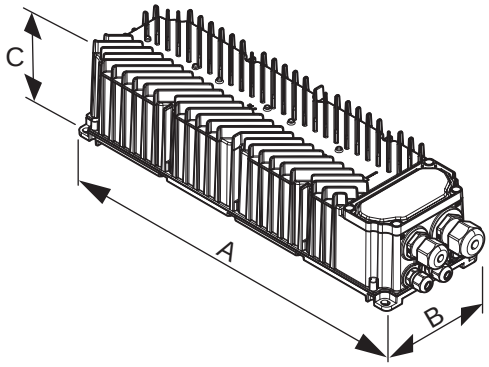

Gear box	A	B	C	(kg)
264L	500	150	120	5.4
396L	500	150	120	6.1

ALTIS LED 132L

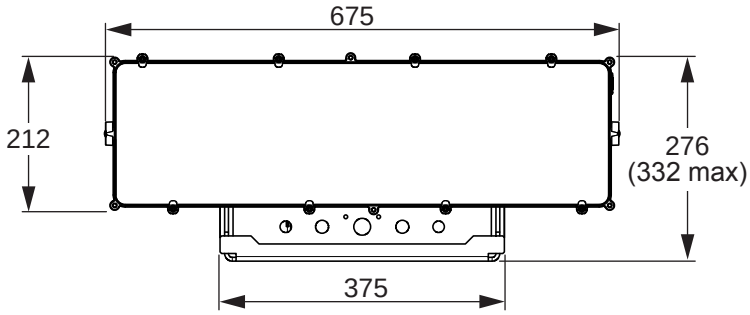

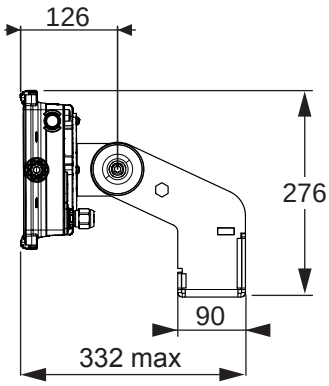

ALTIS LED 264L

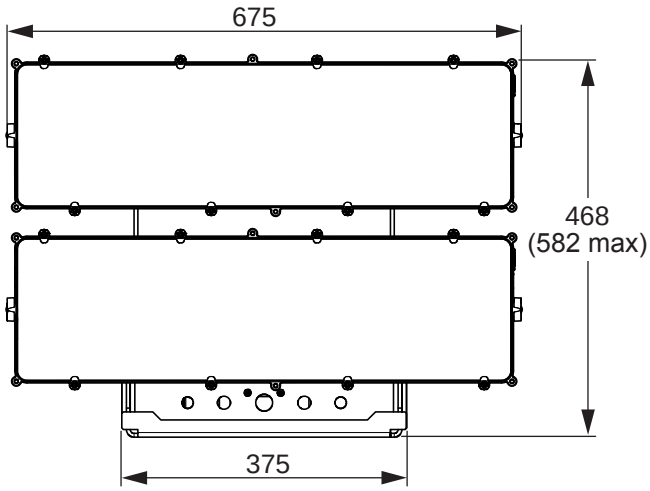

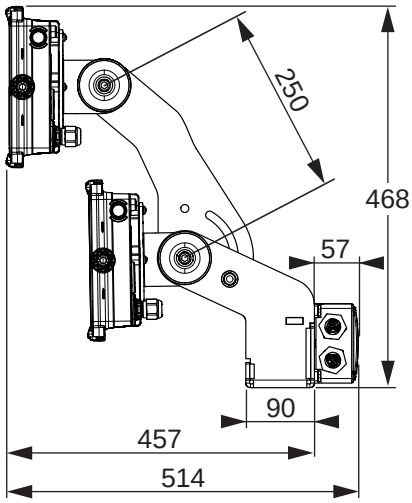

ALTIS LED 396L

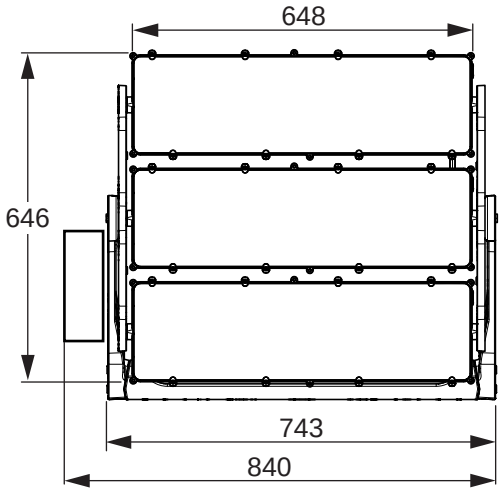

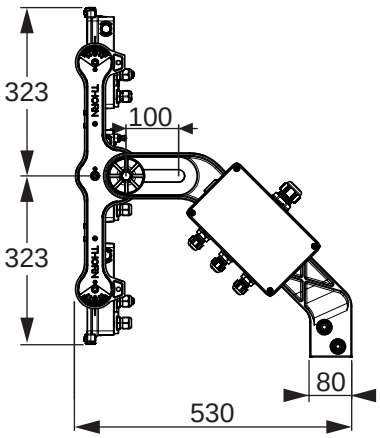

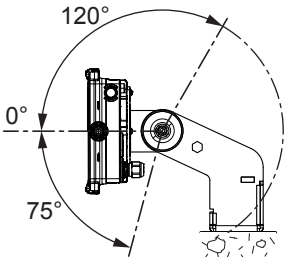

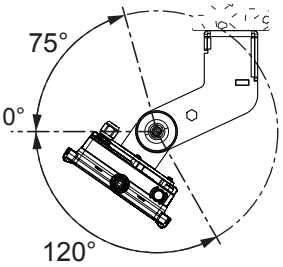

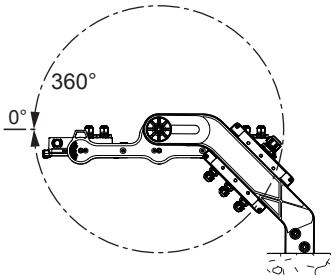

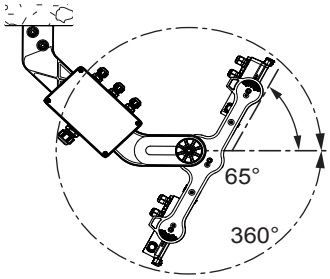

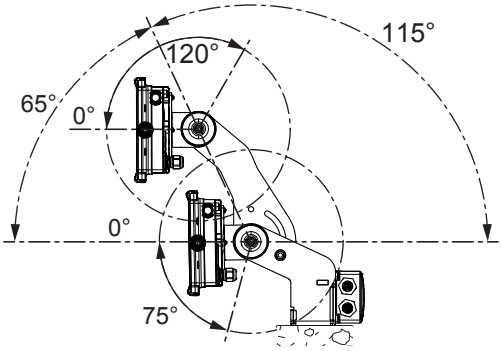

		S_cX 0° *	S_cX 15° *	S_cX 45° *	S_cX 65° *	Weight
ALTIS	132L	0,07	0,08	0,09	0,13	9,6 kg
	264L	0,07	0,10	0,20	0,27	18,4 kg
	396L	0,158	0,167	0,339	0,446	30,7 kg

* These data refer to the worst case at indicated angle

ALTIS LED 132L / 264L

ALTIS LED 396L

4

MTP 60MM : Code 96274660
MTP 76MM : Code 96274659

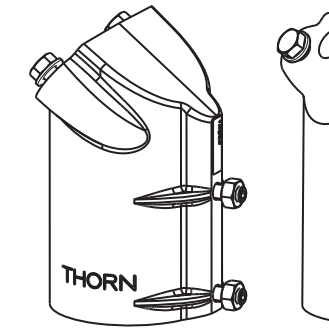

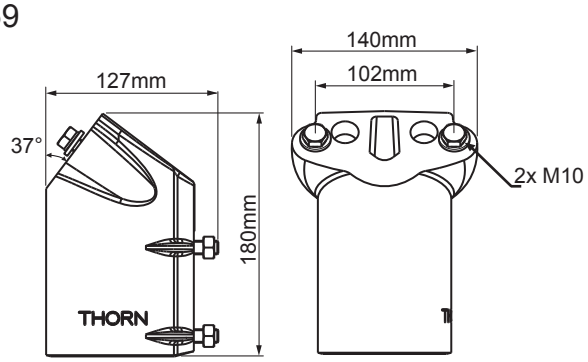

MTP 60MM

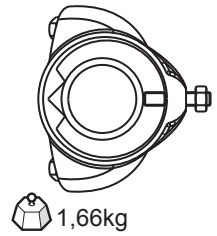

MTP 76MM

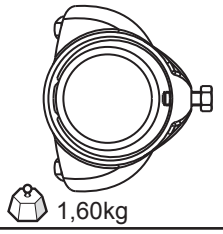

5

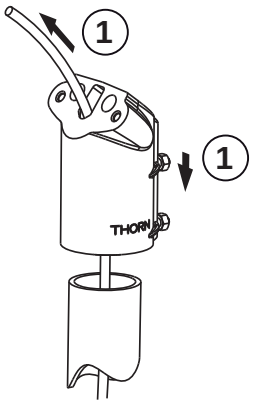

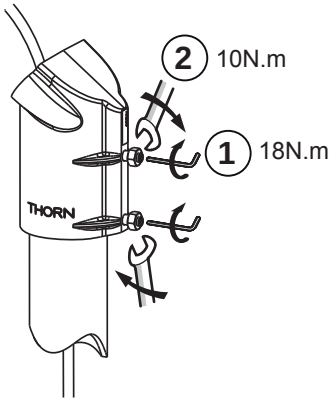

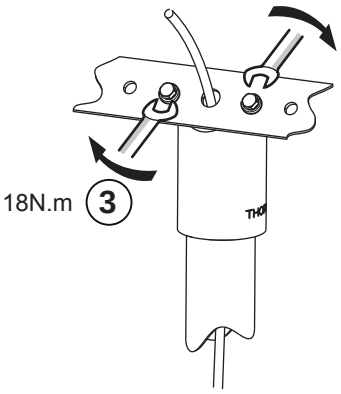

6

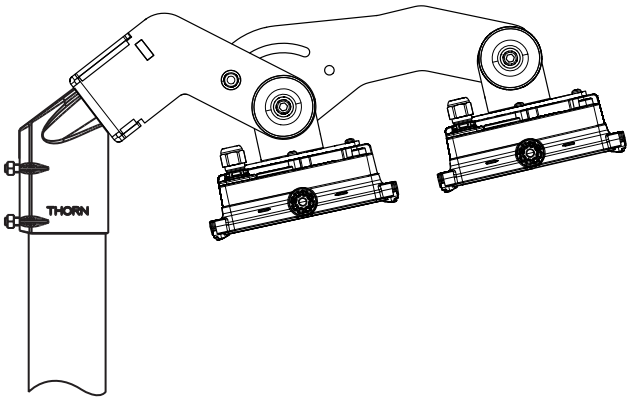

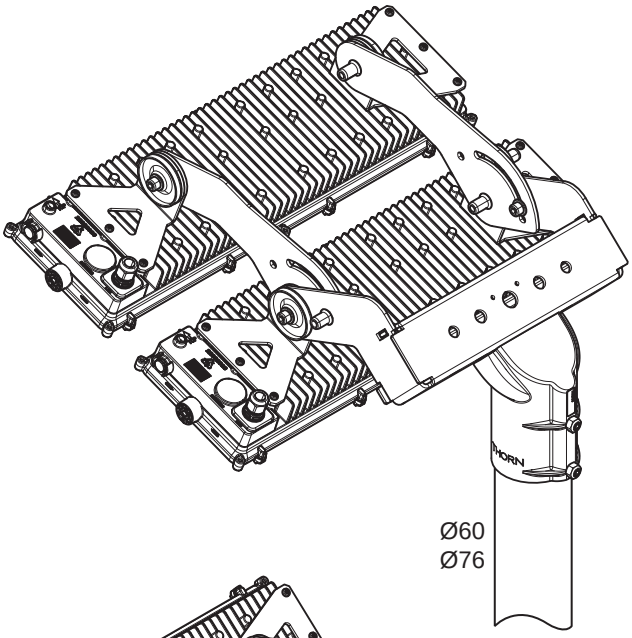

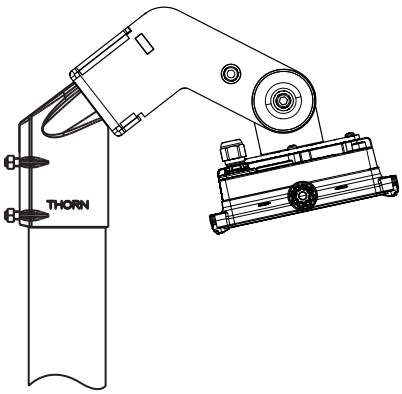

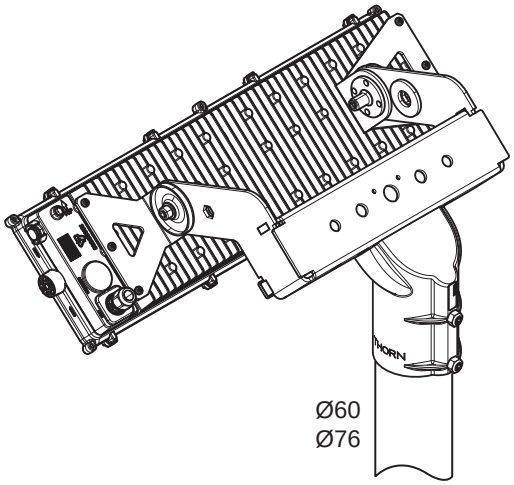

7 ALTIS LED 396L

For installation higher >3m
Secure product with retaining cable attached to the frame

200 mm
Ø22
2x Ø15

① 1x M20 with extra large washer (not provided)
or
② 2x M14 with extra large washer (not provided)

Support surface Ø250 mm minimum

8 ALTIS LED 132L

ALTIS LED 264L

TOP

For installation higher >3m
Secure product with retaining cable attached to the fork

200
Ø15
Ø22

① 1x M20 with extra large washer provided
or
② 2x M14 with extra large washer provided

Support surface Ø250 mm minimum

9 ALTIS LED 264L

① Screw 2x K4 for connection box fixing on the fork provided

10

ALTIS LED 396L

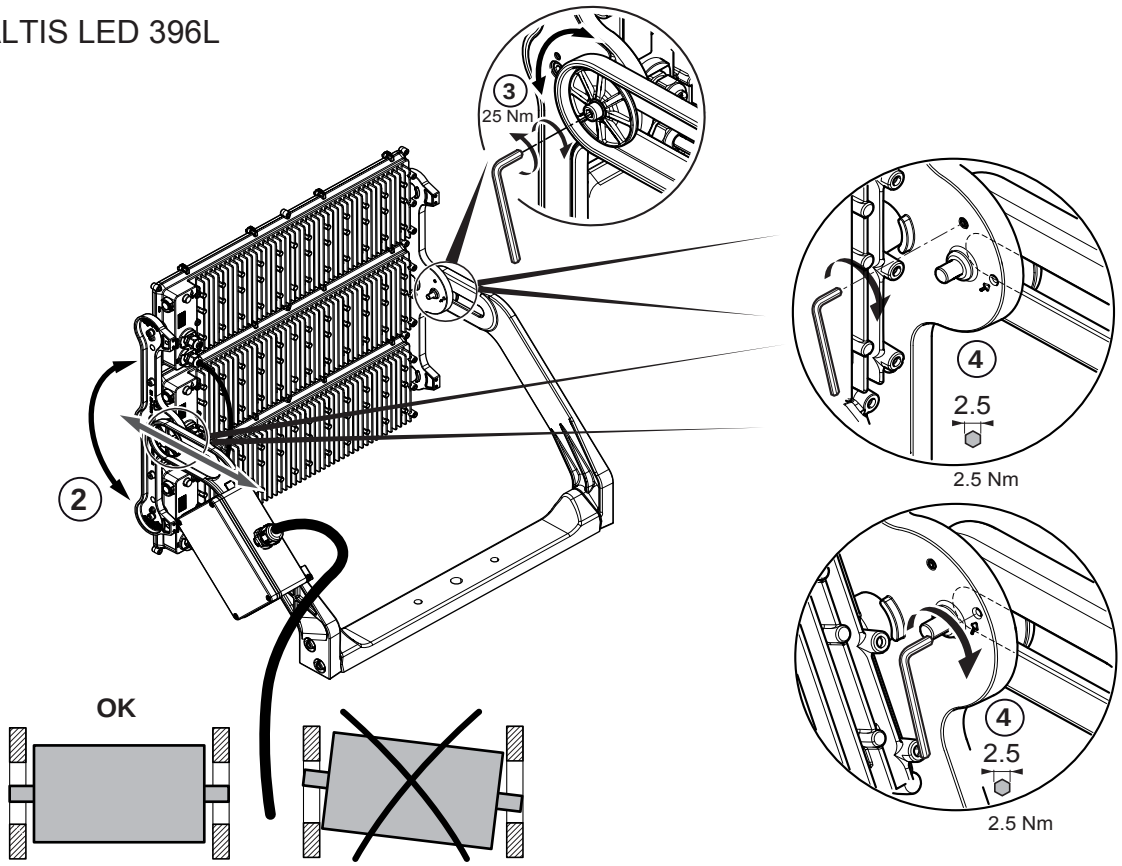

11

ALTISLEDG3 396L NBMBWB 740

Top brick — Middle brick — Bottom brick

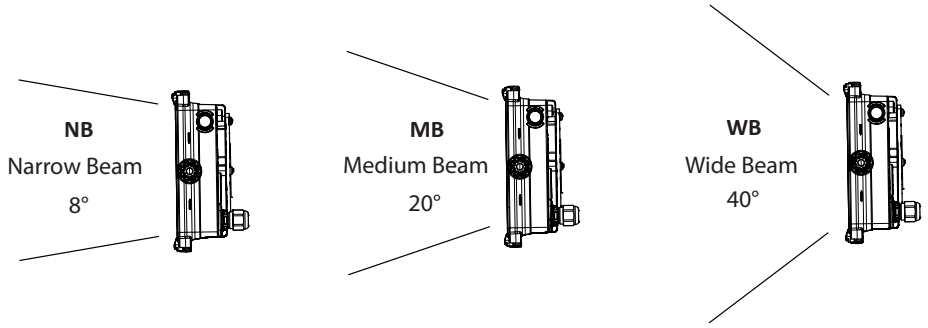

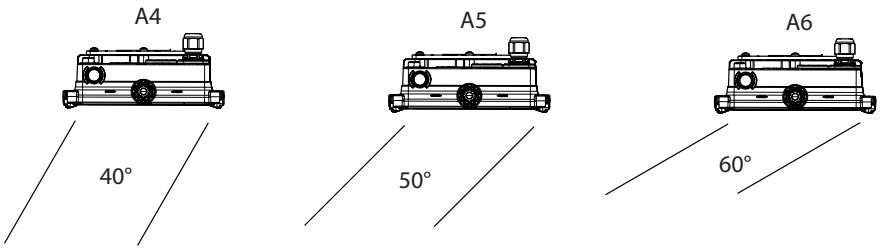

For asymetric, beam direction indicated by the arrow

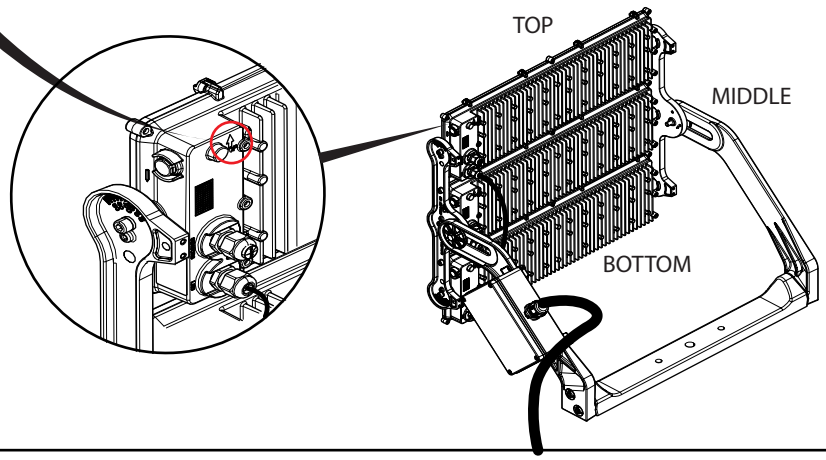

12

REF : 96272658

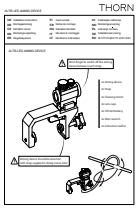

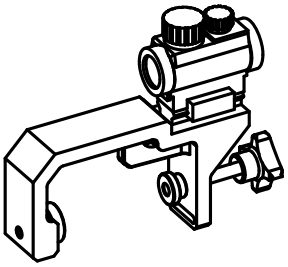

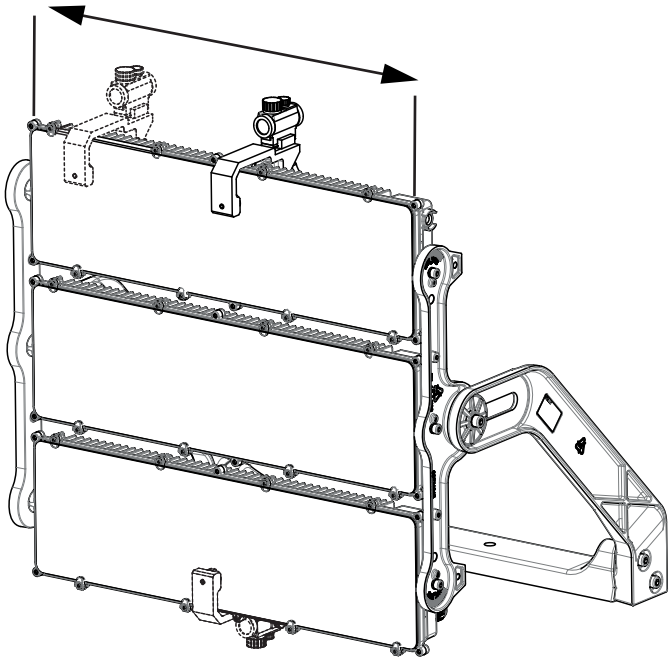

13

To adjust bricks ony by one

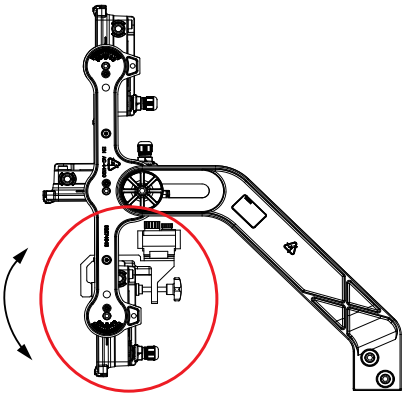

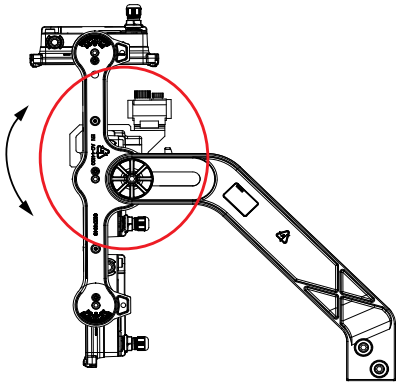

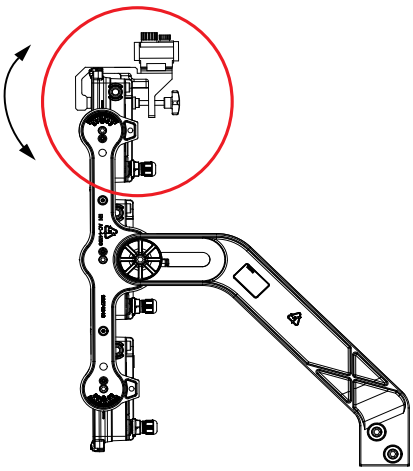

14

ALTIS LED 396L

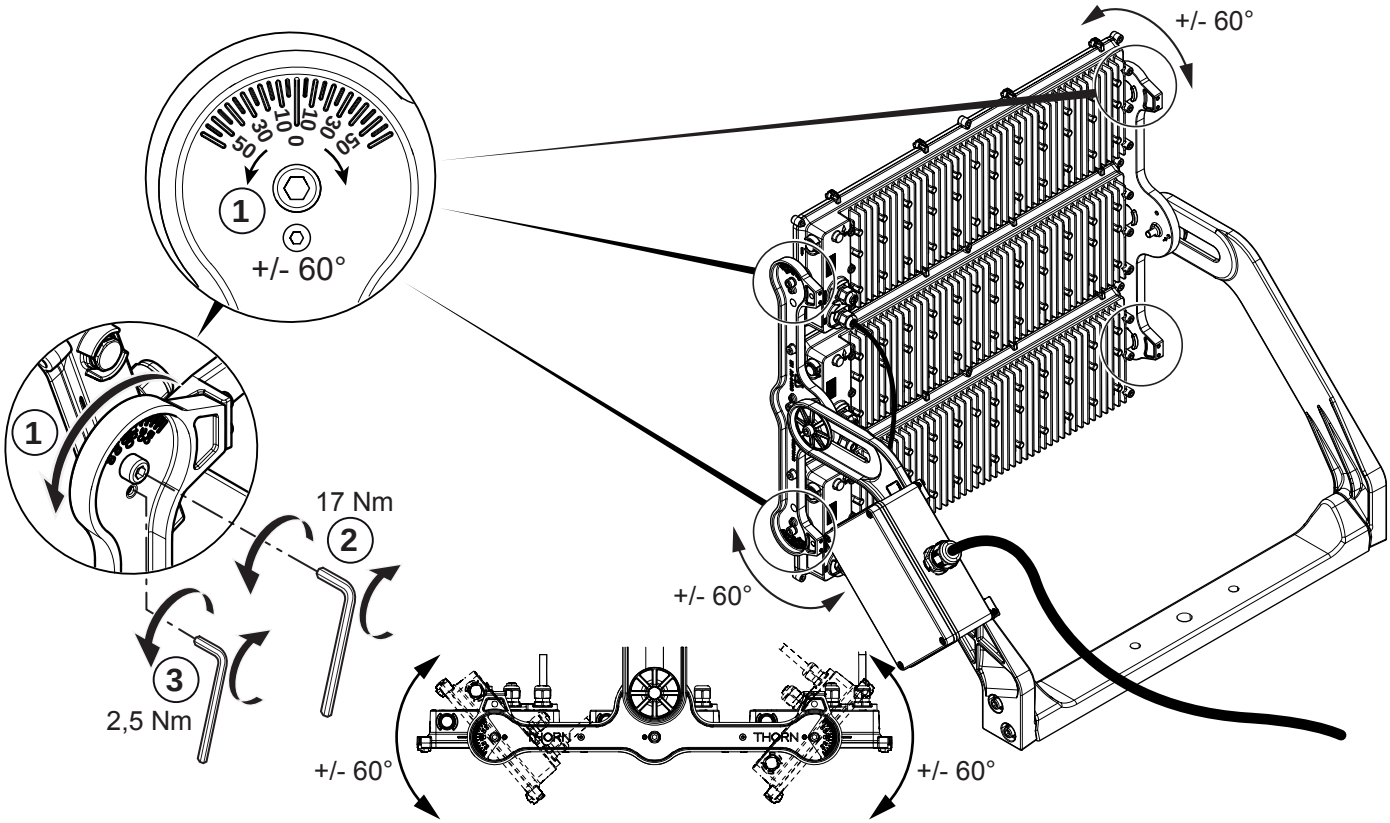

15

ALTIS LED 132L

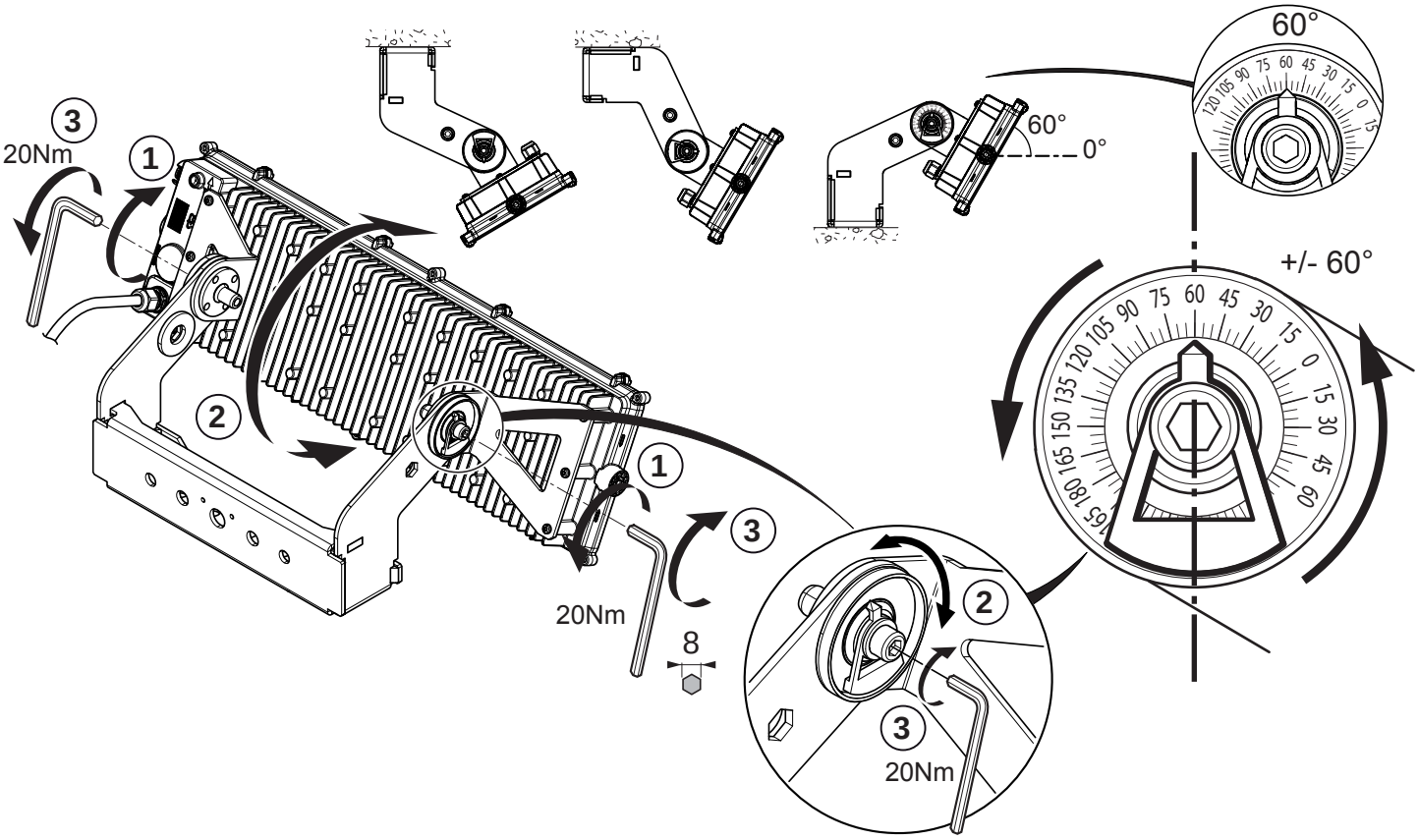

ALTIS LED 264L

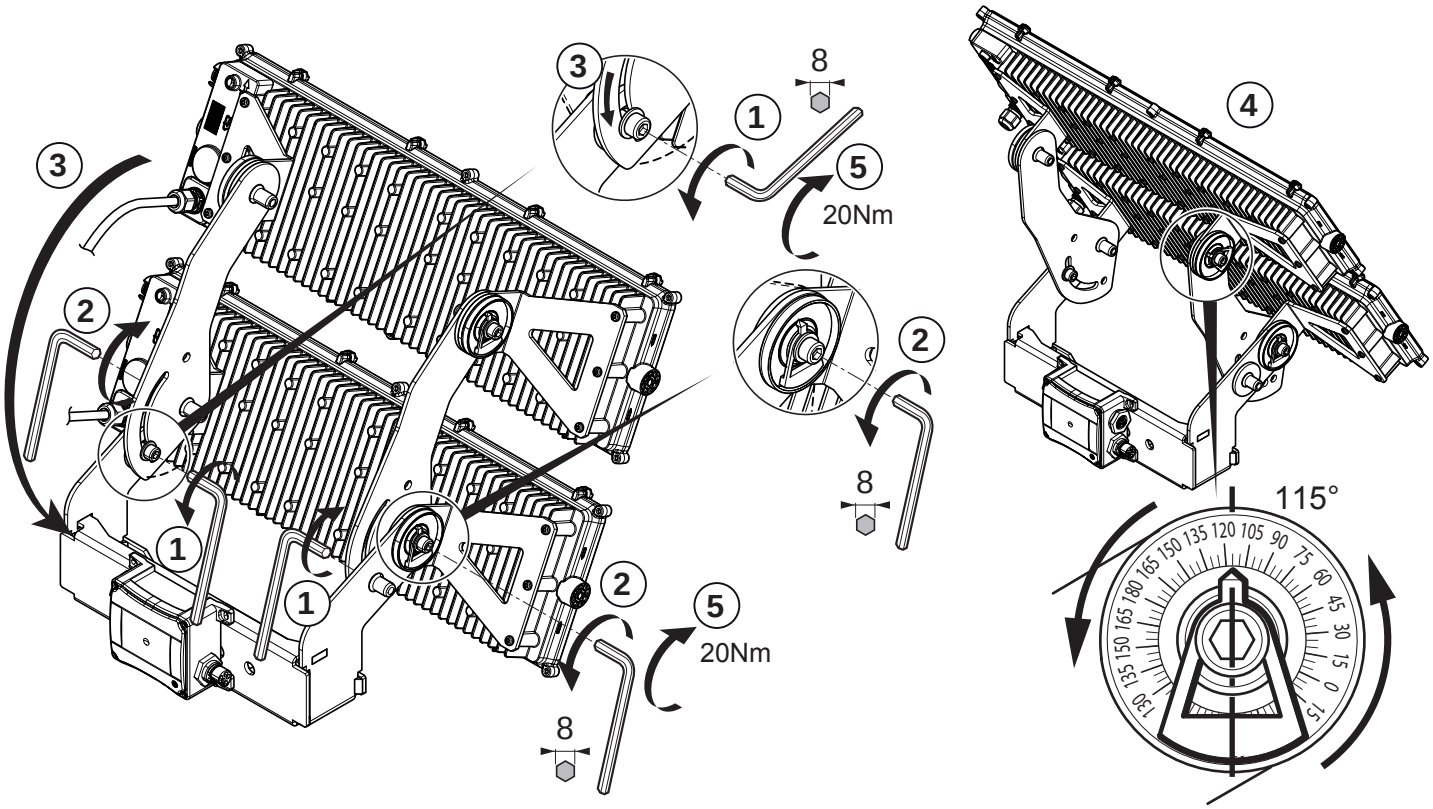

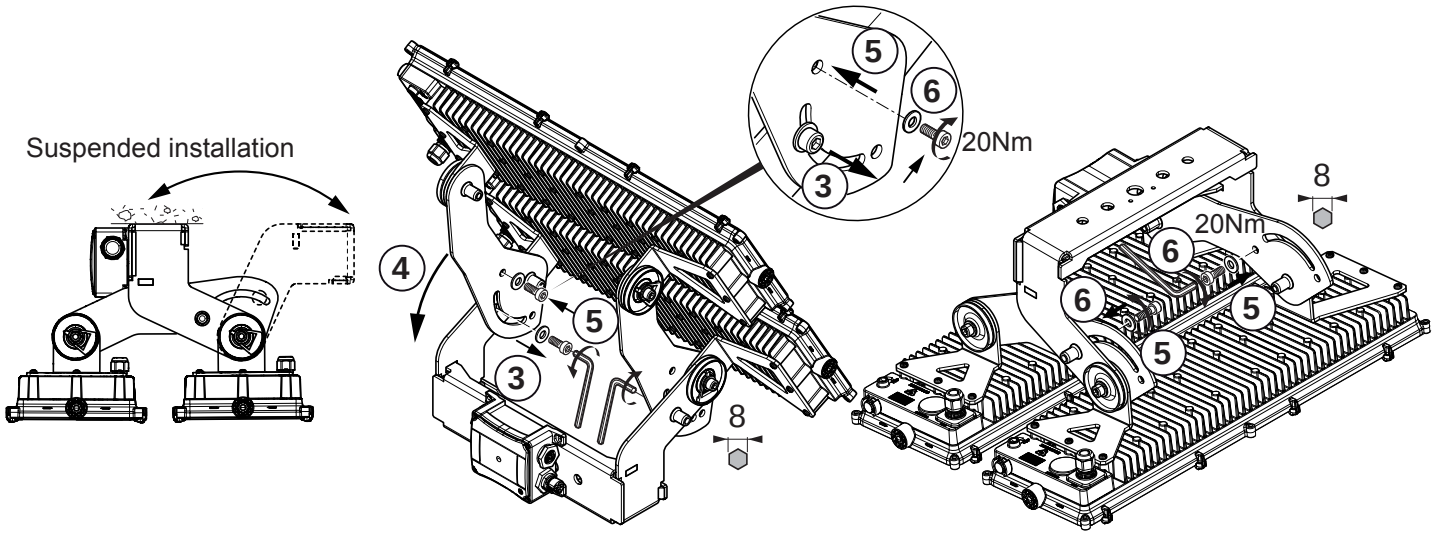

ALTIS LED 264L

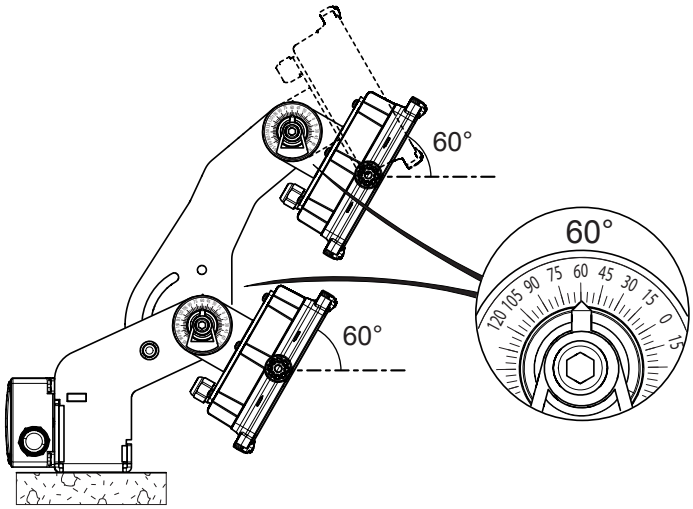

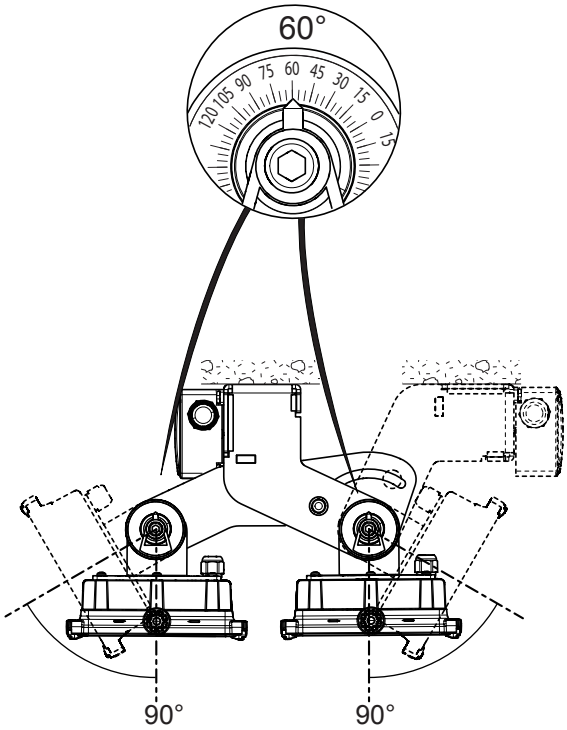

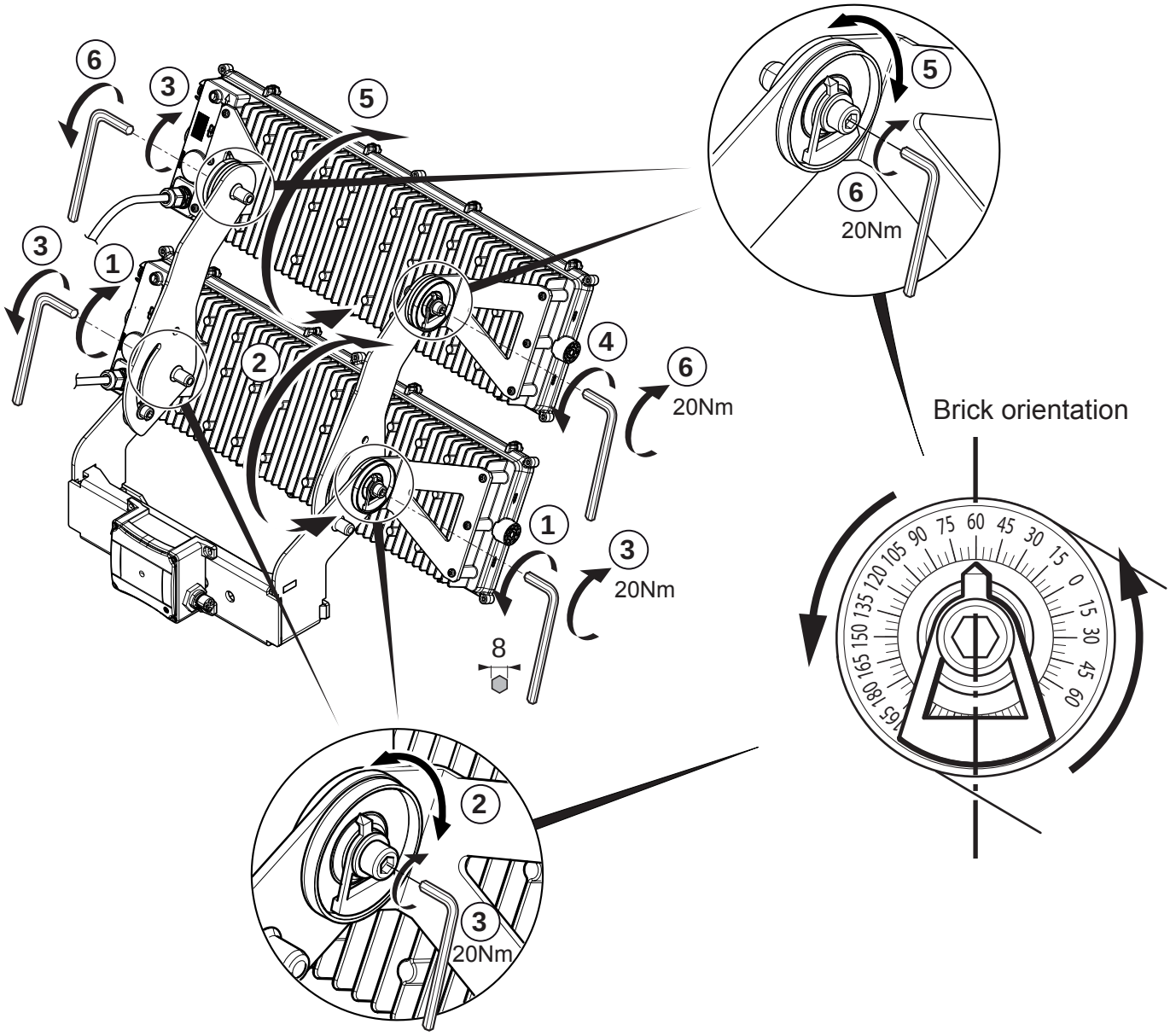

18 ALTIS LED 132L

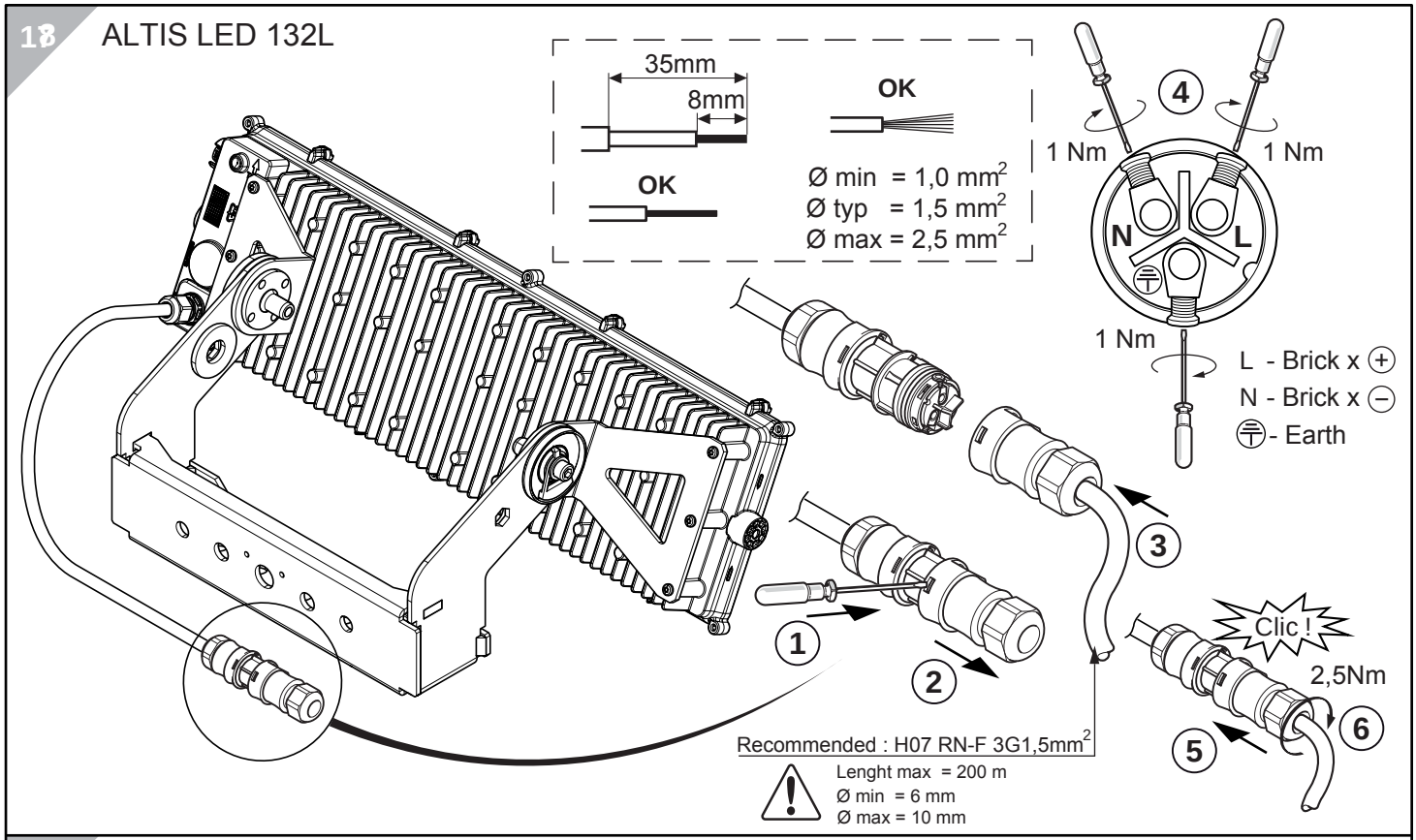

19 ALTIS LED 264L

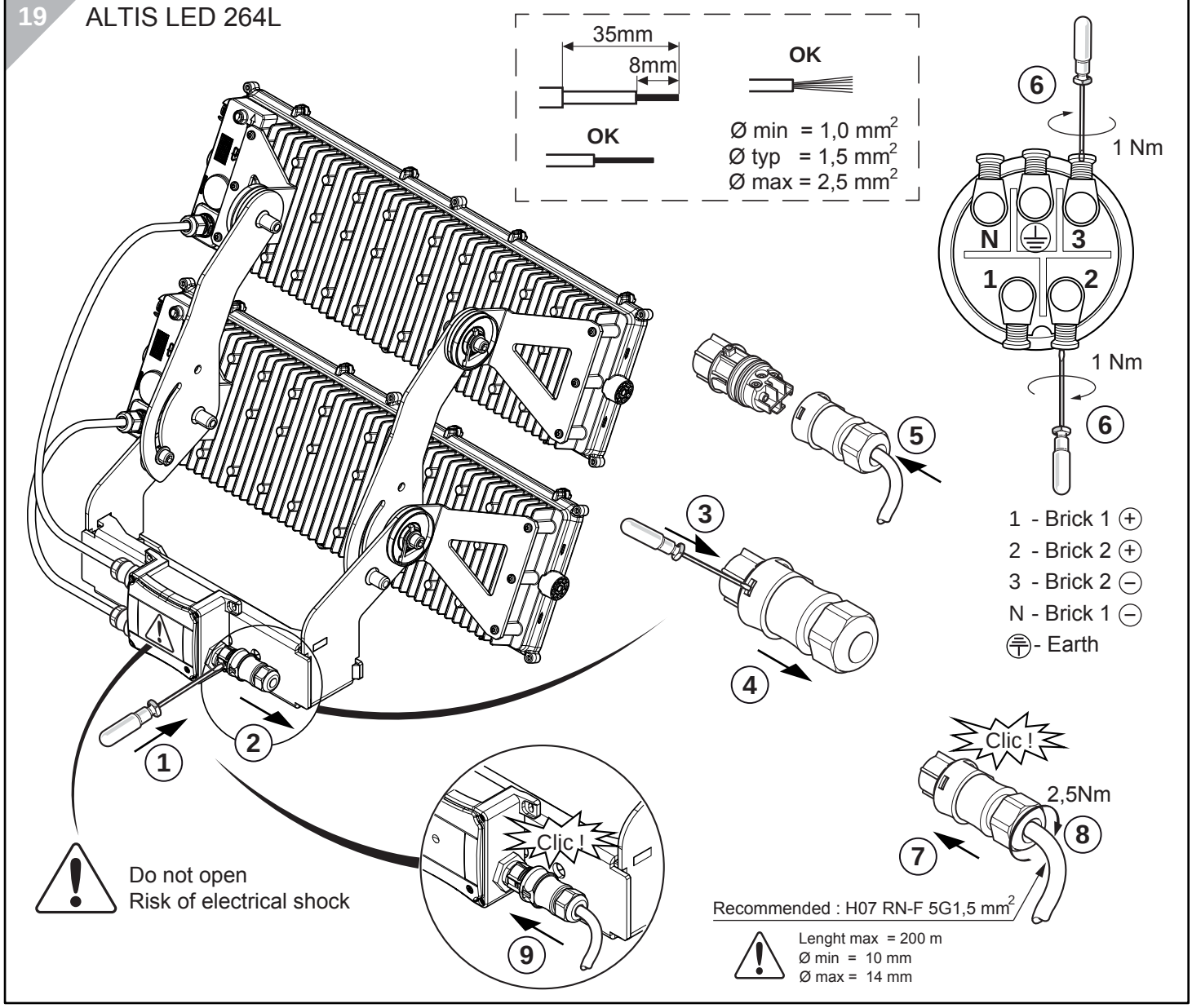

2x ALTIS 132L ELECTRICAL CONNECTION

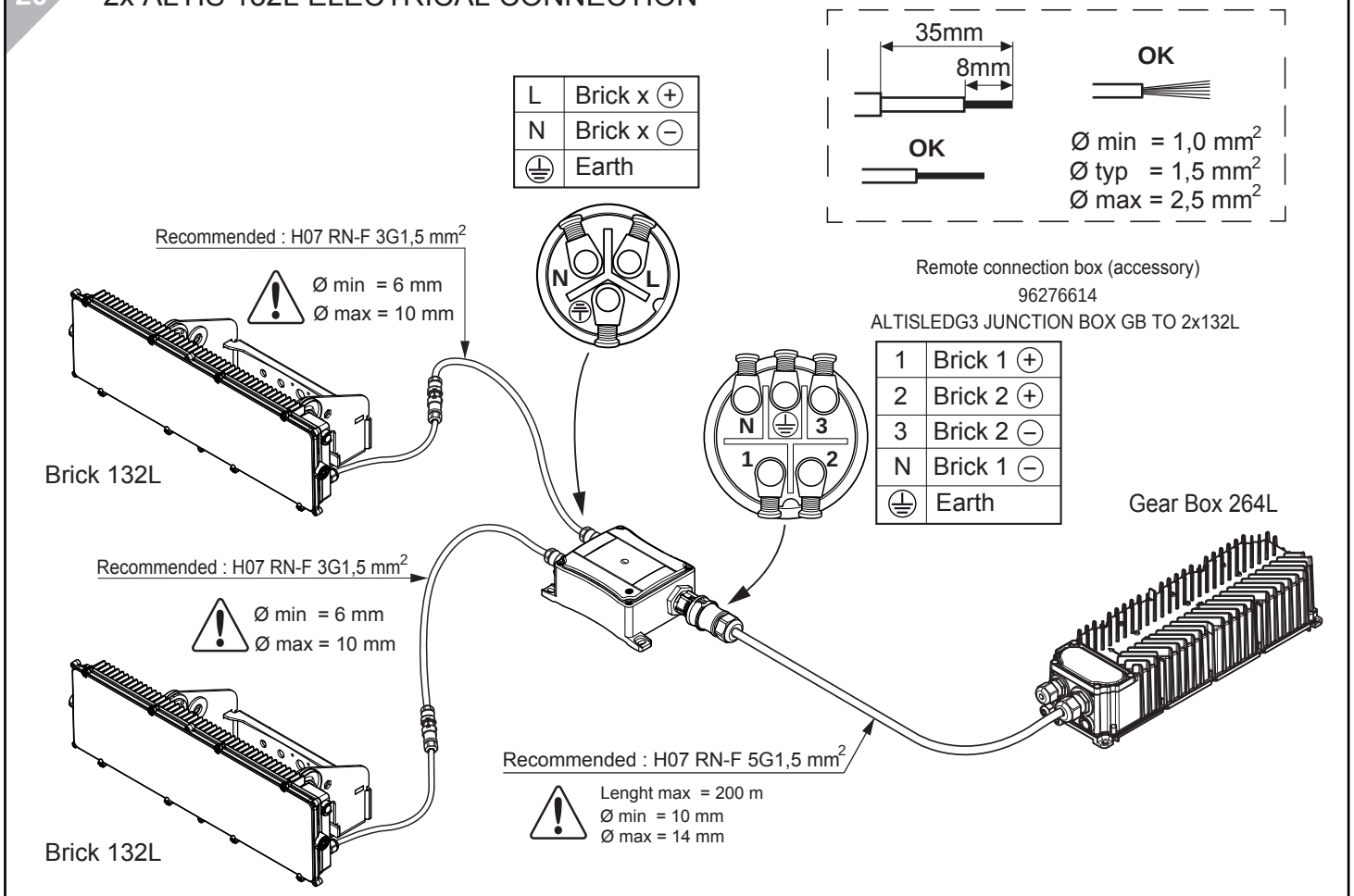

3x ALTIS 132L ELECTRICAL CONNECTION

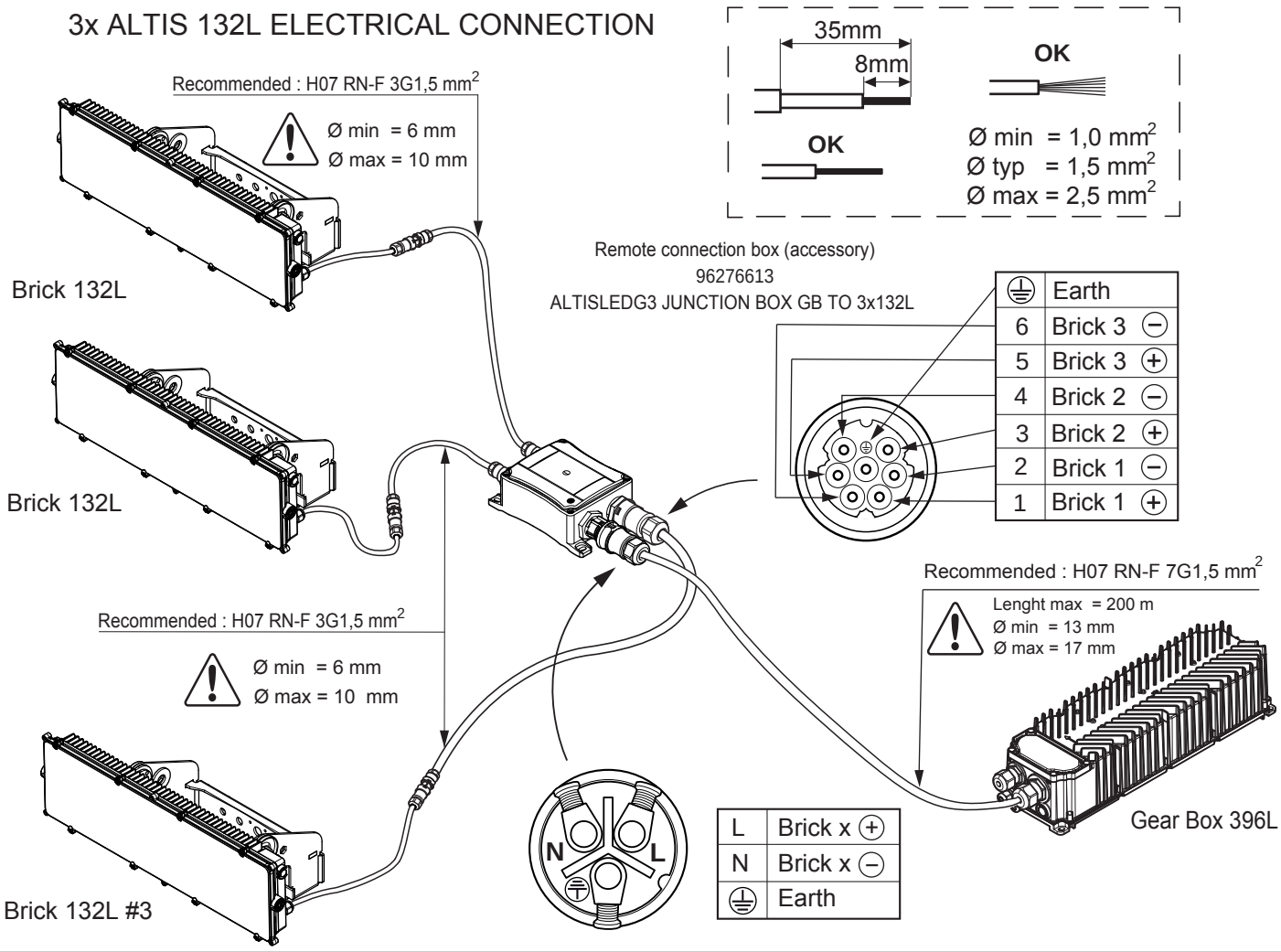

1x ALTIS 264L and 1x ALTIS 132L ELECTRICAL CONNECTION

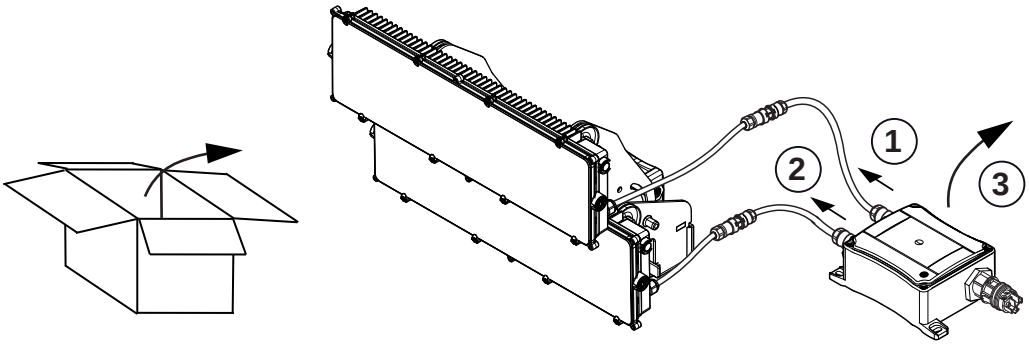

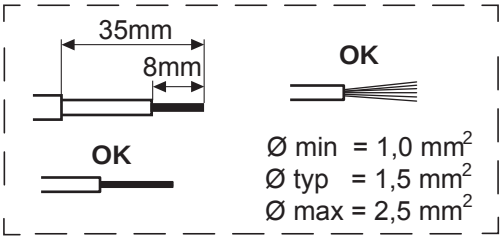

Remote connection box (accessory)
96276613
ALTISLEDG3 JUNCTION BOX GB TO 3x132L

⏚	Earth
6	Brick 3 ⊖
5	Brick 3 ⊕
4	Brick 2 ⊖
3	Brick 2 ⊕
2	Brick 1 ⊖
1	Brick 1 ⊕

Recommended : H07 RN-F 3G1,5 mm2

Ø min = 6 mm
Ø max = 10 mm

Brick 264L

Gear Box 396L

Recommended : H07 RN-F 3G1,5 mm2

Ø min = 6 mm
Ø max = 10 mm

Brick 132L

Recommended : H07 RN-F 7G1,5 mm2

Lenght max = 200 m
Ø min = 13 mm
Ø max = 18 mm

N L

L	Brick x ⊕
N	Brick x ⊖
⏚	Earth

ALTIS LED 396L

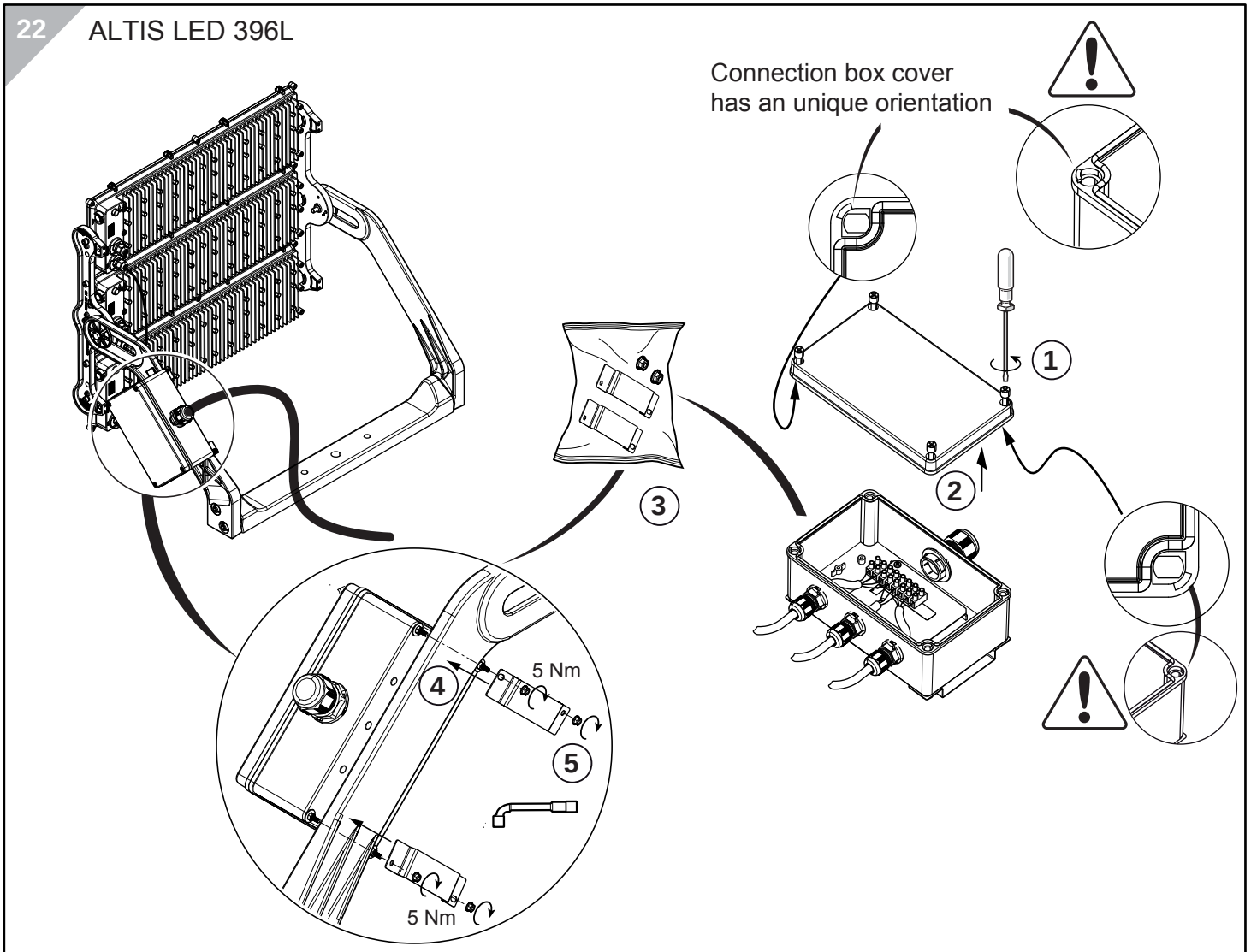

1x ALTIS 396L ELECTRICAL CONNECTION

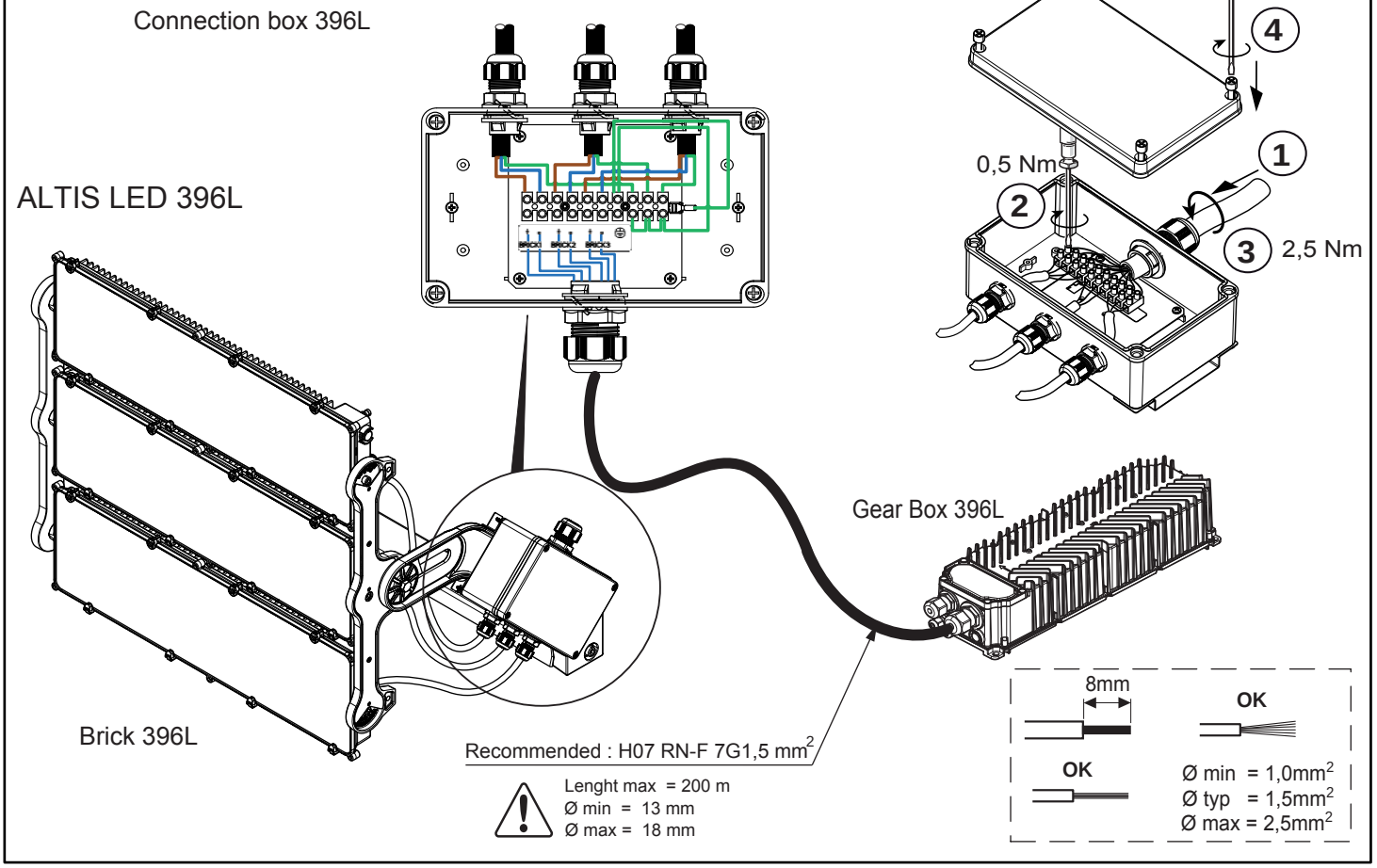

ALTIS LED 396L/264L / ELECTRICAL CONNECTION / DALI

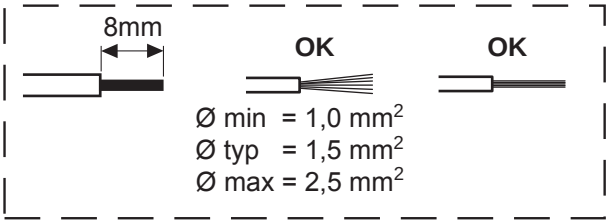

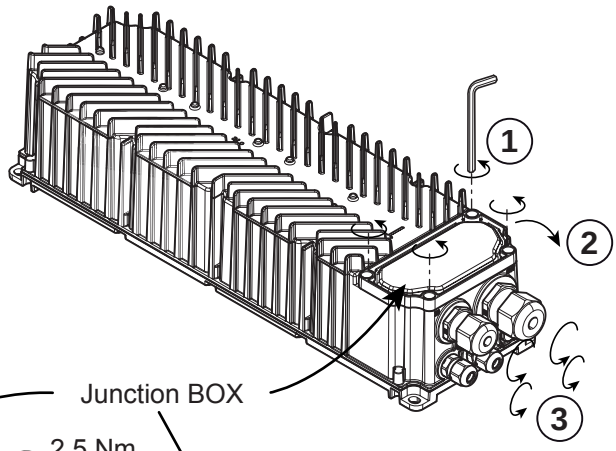

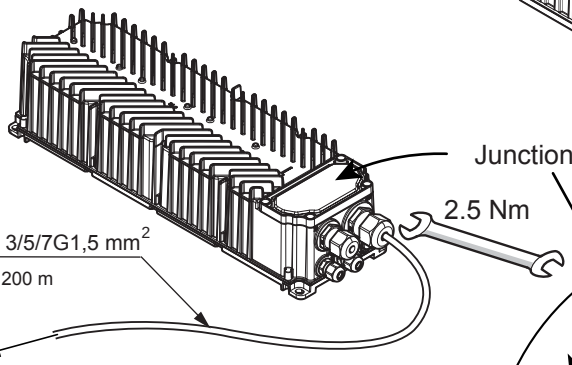

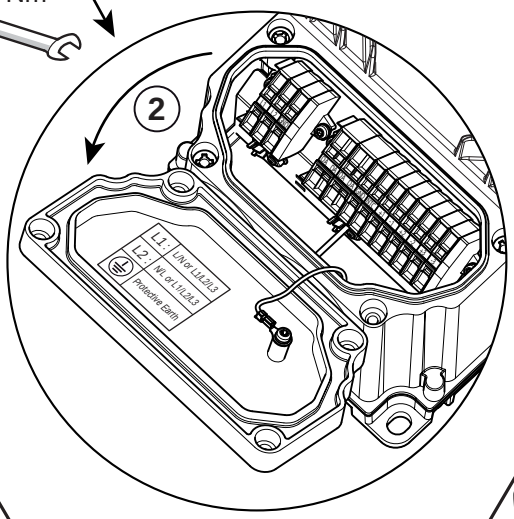

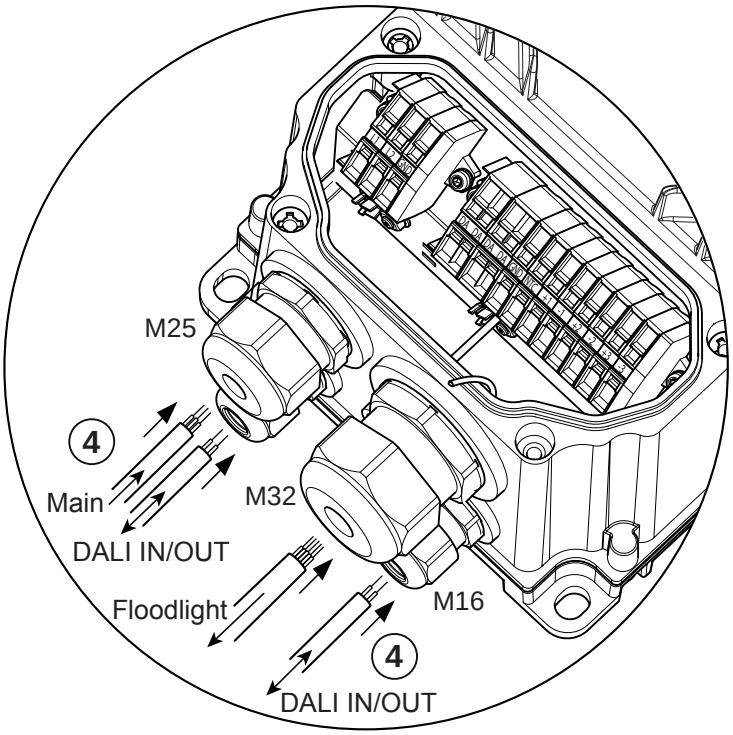

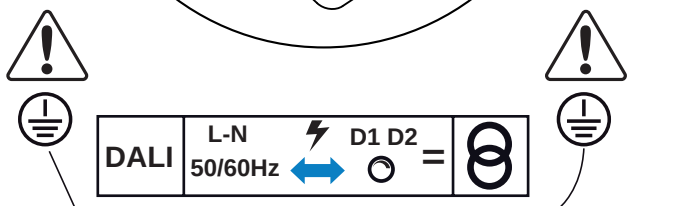

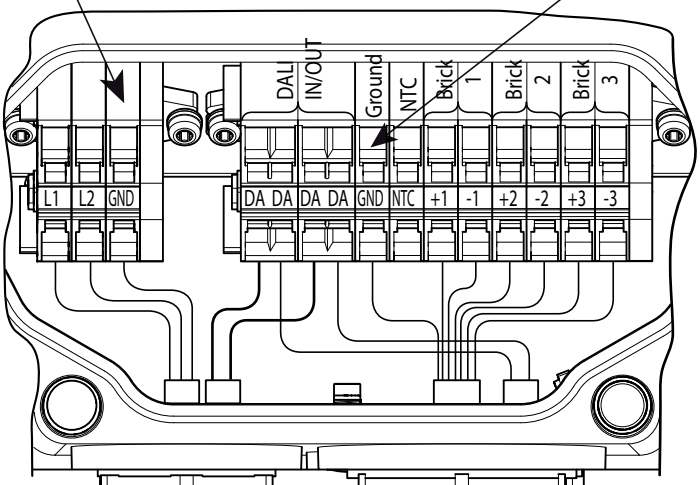

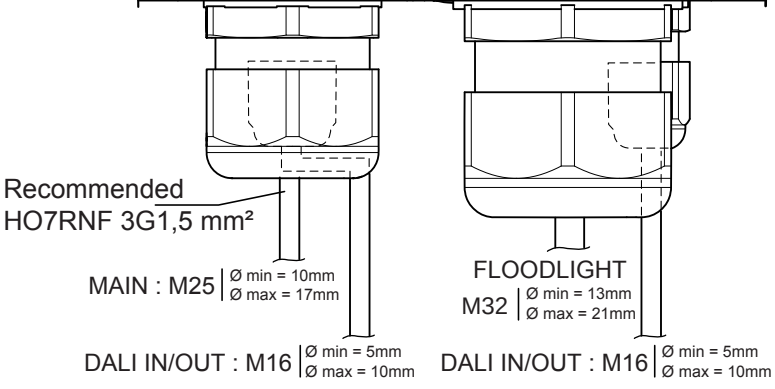

PINOUT		
Number	**Label**	**Description**
1	L1	L/N or L1/L2/L3
2	L2	N/L or L1/L2/L3
3	⏚	Protective Earth
4	DA	DALI 1 input/relaunch
5	DA	DALI 1 input/relaunch
6	DA	DALI 2 input/relaunch
7	DA	DALI 2 input/relaunch
8	⏚	Protective Earth
9	NTC	Thermal measure input
10	+1	LED1+ connection
11	-1	LED1- connection
12	+2	LED2+ connection
13	-2	LED2- connection
14	+3	LED3+ connection
15	-3	LED3- connection

ALTIS LED 396L/264L / ELECTRICAL CONNECTION / RDM-DMX

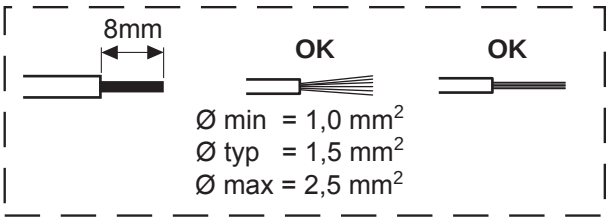

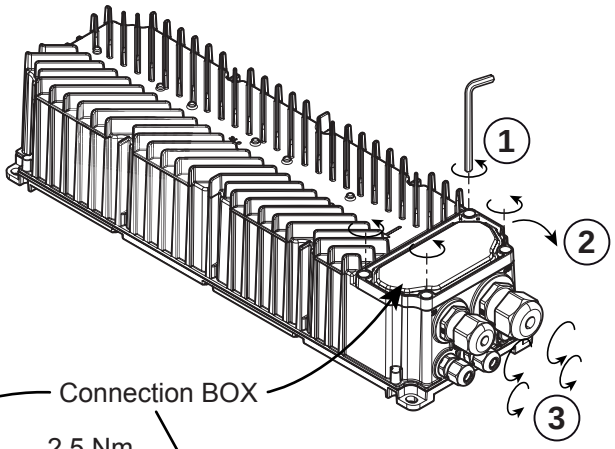

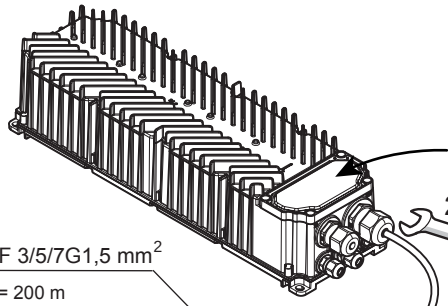

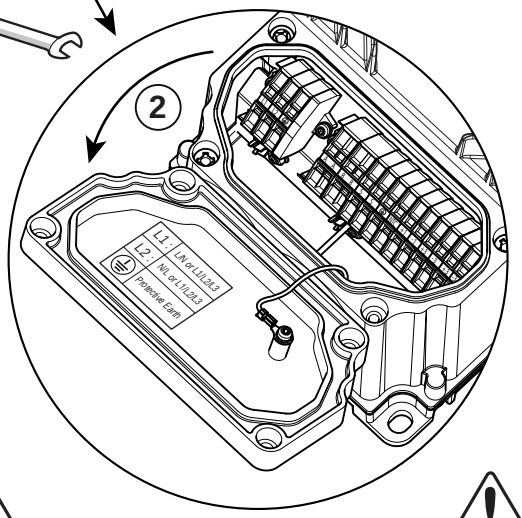

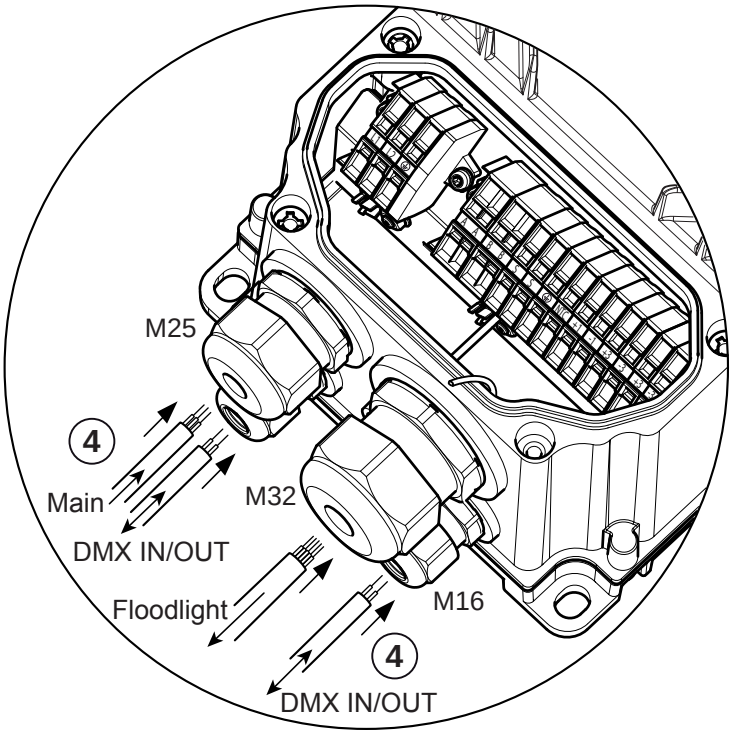

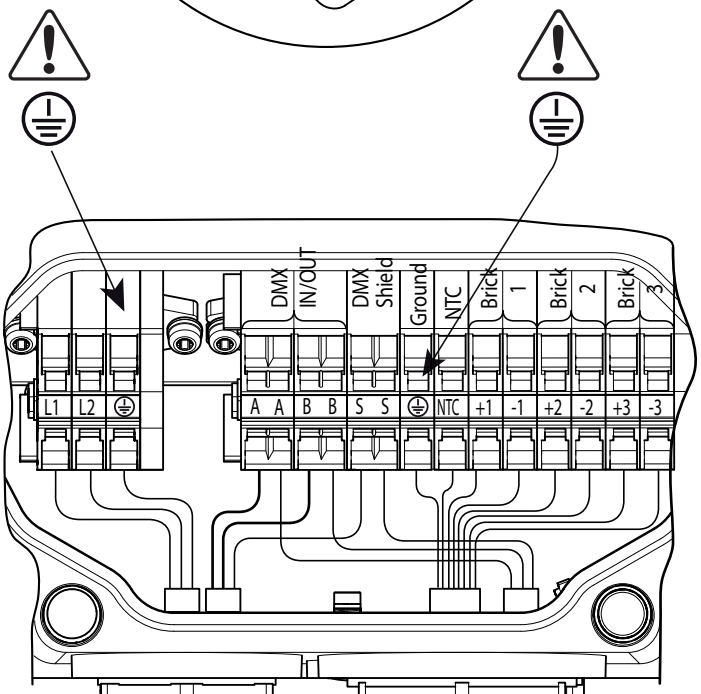

PINOUT		
Number	**Label**	**Description**
1	L1	L/N or L1/L2/L3
2	L2	N/L or L1/L2/L3
3	⏚	Protective Earth
4	A	DMX A input/relaunch
5	A	DMX A input/relaunch
6	B	DMX B input/relaunch
7	B	DMX B input/relaunch
8	S	DMX shield
9	S	DMX shield
10	⏚	Protective Earth
11	NTC	Thermal measure input
12	+1	LED1+ connection
13	-1	LED1- connection
14	+2	LED2+ connection
15	-2	LED2- connection
16	+3	LED3+ connection
17	-3	LED3- connection

Recommended
HO7RNF 3G1,5 mm²

MAIN : M25 | Ø min = 10mm / Ø max = 17mm

DMX IN/OUT : M16 | Ø min = 5mm / Ø max = 10mm

FLOODLIGHT
M32 | Ø min = 13mm / Ø max = 21mm

DMX IN/OUT : M16 | Ø min = 5mm / Ø max = 10mm

ALTIS GEAR BOX MOUNTING

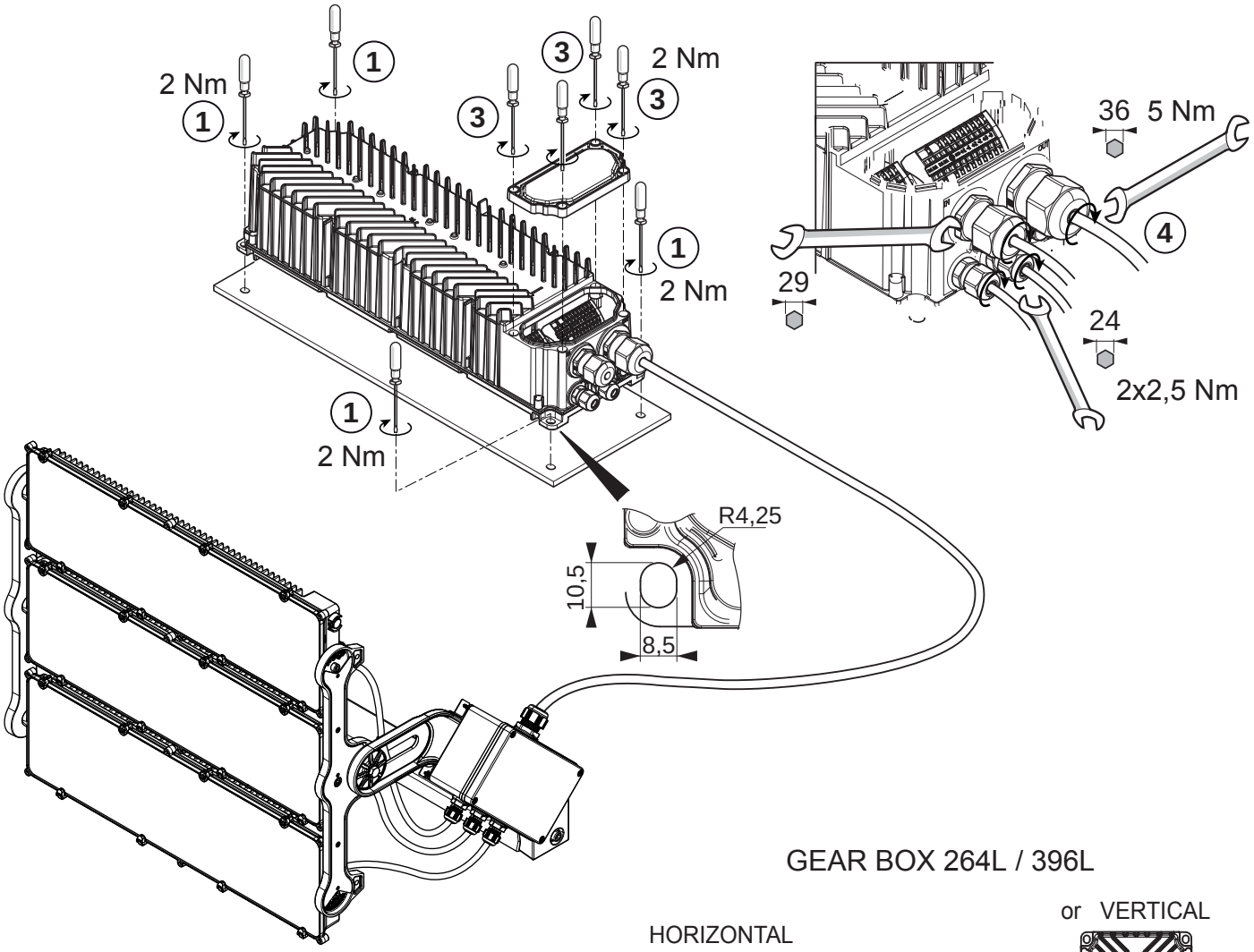

GEAR BOX 264L / 396L

Drilling recommendation:

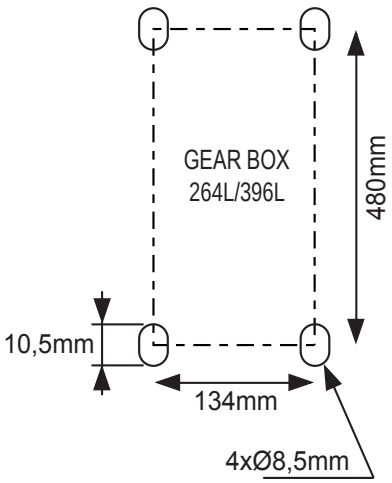

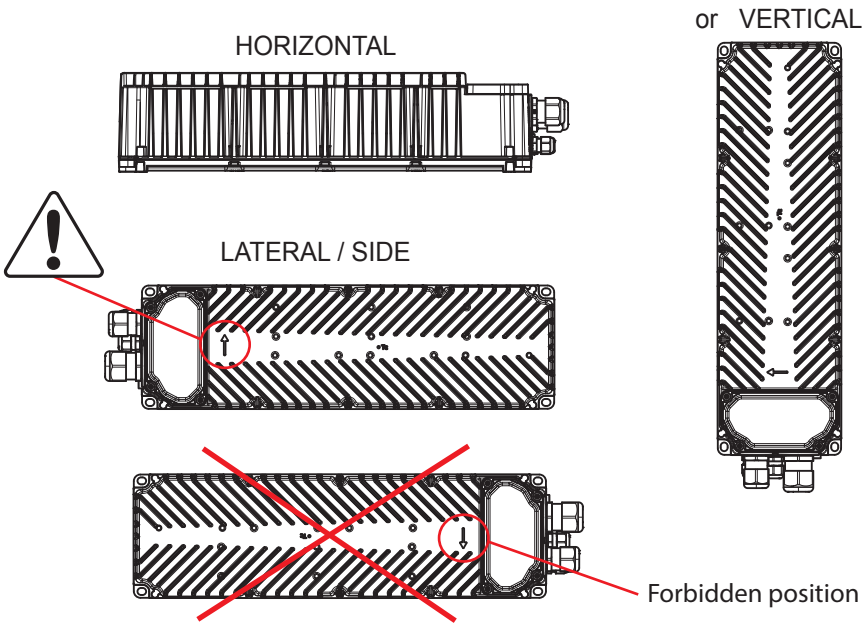

ALTIS GEAR BOX

CIRCUIT BREAKER recommendation

It should mentioned in the notice that calculation has been done with a Circuit Breaker Load Factor of 100%.

GEAR BOX 396L / 120-277Vac models (designation : ALTISLEDG3 GB 396L...120-277Vac...)

When loaded with 3 ALTIS led modules :

V in Nominal	Inrush Current Data		# Drivers for each Circuit Breaker											
	I peak (A)	Half Value Time (µs)	Type B 10A	Type B 16A	Type B 20A	Type B 25A	Type C 10A	Type C 16A	Type C 20A	Type C 25A	Type D 10A	Type D 16A	Type D 20A	Type D 25A
120Vac	36	900	0	0	1	1	0	0	1	1	0	0	1	1
230Vac	61	850	0	1	1	1	1	1	2	2	1	1	2	3
277Vac	63	1750	0	1	1	1	1	2	2	3	1	2	2	3

V in Nominal	Inrush Current Data		# Drivers for each Circuit Breaker											
	I peak (A)	Half Value Time (µs)	Type B 32A	Type B 40A	Type B 50A	Type B 63A	Type C 32A	Type C 40A	Type C 50A	Type C 63A	Type D 32A	Type D 40A	Type D 50A	Type D 63A
120Vac	36	900	1	2	3	3	1	2	3	3	1	2	3	3
230Vac	61	850	2	2	3	4	3	4	5	7	3	4	6	7
277Vac	63	1750	2	2	3	4	3	4	6	7	4	5	6	7

When loaded with 2 ALTIS led modules :

V in Nominal	Inrush Current Data		# Drivers for each Circuit Breaker											
	I peak (A)	Half Value Time (µs)	Type B 32A	Type B 40A	Type B 50A	Type B 63A	Type C 32A	Type C 40A	Type C 50A	Type C 63A	Type D 32A	Type D 40A	Type D 50A	Type D 63A
120Vac	36	900	2	3	4	5	2	3	4	5	2	3	4	5
230Vac	61	850	2	2	3	4	3	4	5	7	5	7	9	11
277Vac	63	1750	2	2	3	4	3	4	6	7	6	7	9	11

When loaded with 1 ALTIS led module :

V in Nominal	Inrush Current Data		# Drivers for each Circuit Breaker											
	I peak (A)	Half Value Time (µs)	Type B 32A	Type B 40A	Type B 50A	Type B 63A	Type C 32A	Type C 40A	Type C 50A	Type C 63A	Type D 32A	Type D 40A	Type D 50A	Type D 63A
120Vac	36	900	4	5	6	7	6	7	9	11	6	7	9	11
230Vac	61	850	2	2	3	4	3	4	5	7	7	8	11	13
277Vac	63	1750	2	2	3	4	3	4	6	7	6	8	10	13

GEAR BOX 396L / 200-440Vac models (designation : ALTISLEDG3 GB 396L...200-440Vac...)

When loaded with 3 ALTIS led modules :

V in Nominal	Inrush Current Data		# Drivers for each Circuit Breaker											
	I peak (A)	Half Value Time (µs)	Type B 10A	Type B 16A	Type B 20A	Type B 25A	Type C 10A	Type C 16A	Type C 20A	Type C 25A	Type D 10A	Type D 16A	Type D 20A	Type D 25A
230Vac	40	2300	1	1	2	2	1	1	2	2	1	1	2	2
400Vac	68	1850	0	1	1	1	1	1	2	3	1	2	2	3

V in Nominal	Inrush Current Data		# Drivers for each Circuit Breaker											
	I peak (A)	Half Value Time (µs)	Type B 32A	Type B 40A	Type B 50A	Type B 63A	Type C 32A	Type C 40A	Type C 50A	Type C 63A	Type D 32A	Type D 40A	Type D 50A	Type D 63A
230Vac	40	2300	3	4	5	6	3	4	5	6	3	4	5	6
400Vac	68	1850	2	2	3	4	3	4	5	7	5	6	8	10

When loaded with 2 ALTIS led modules :

V in Nominal	Inrush Current Data		# Drivers for each Circuit Breaker											
	I peak (A)	Half Value Time (µs)	Type B 32A	Type B 40A	Type B 50A	Type B 63A	Type C 32A	Type C 40A	Type C 50A	Type C 63A	Type D 32A	Type D 40A	Type D 50A	Type D 63A
230Vac	40	2300	3	4	5	6	5	6	8	10	5	6	8	10
400Vac	68	1850	2	2	3	4	3	4	5	7	6	7	9	12

When loaded with 1 ALTIS led module :

V in Nominal	Inrush Current Data		# Drivers for each Circuit Breaker											
	I peak (A)	Half Value Time (µs)	Type B 32A	Type B 40A	Type B 50A	Type B 63A	Type C 32A	Type C 40A	Type C 50A	Type C 63A	Type D 32A	Type D 40A	Type D 50A	Type D 63A
230Vac	40	2300	3	4	5	6	5	6	8	10	10	13	16	21
400Vac	68	1850	2	2	3	4	3	4	5	7	6	7	9	12

GEAR BOX 264L / 200-440Vac models (designation : ALTISLEDG3 GB 264L...200-440Vac...)

When loaded with 2 ALTIS led modules :

V in Nominal	Inrush Current Data		# Drivers for each Circuit Breaker											
	I peak (A)	Half Value Time (µs)	Type B 10A	Type B 16A	Type B 20A	Type B 25A	Type C 10A	Type C 16A	Type C 20A	Type C 25A	Type D 10A	Type D 16A	Type D 20A	Type D 25A
230Vac	29	2000	1	1	2	2	1	2	3	4	1	2	3	4
400Vac	50	2000	0	1	1	1	1	1	2	3	2	3	4	5

V in Nominal	Inrush Current Data		# Drivers for each Circuit Breaker											
	I peak (A)	Half Value Time (µs)	Type B 32A	Type B 40A	Type B 50A	Type B 63A	Type C 32A	Type C 40A	Type C 50A	Type C 63A	Type D 32A	Type D 40A	Type D 50A	Type D 63A
230Vac	29	2000	4	6	7	9	5	6	8	10	5	6	8	10
400Vac	50	2000	2	3	4	5	5	7	9	11	8	10	13	17

When loaded with 1 ALTIS led module :

V in Nominal	Inrush Current Data		# Drivers for each Circuit Breaker											
	I peak (A)	Half Value Time (µs)	Type B 32A	Type B 40A	Type B 50A	Type B 63A	Type C 32A	Type C 40A	Type C 50A	Type C 63A	Type D 32A	Type D 40A	Type D 50A	Type D 63A
230Vac	29	2000	4	6	7	9	7	9	12	15	10	12	16	20
400Vac	50	2000	2	3	4	5	5	7	9	11	8	10	13	17

GUIDELINE FOR INTEGRATION OF GEAR BOX

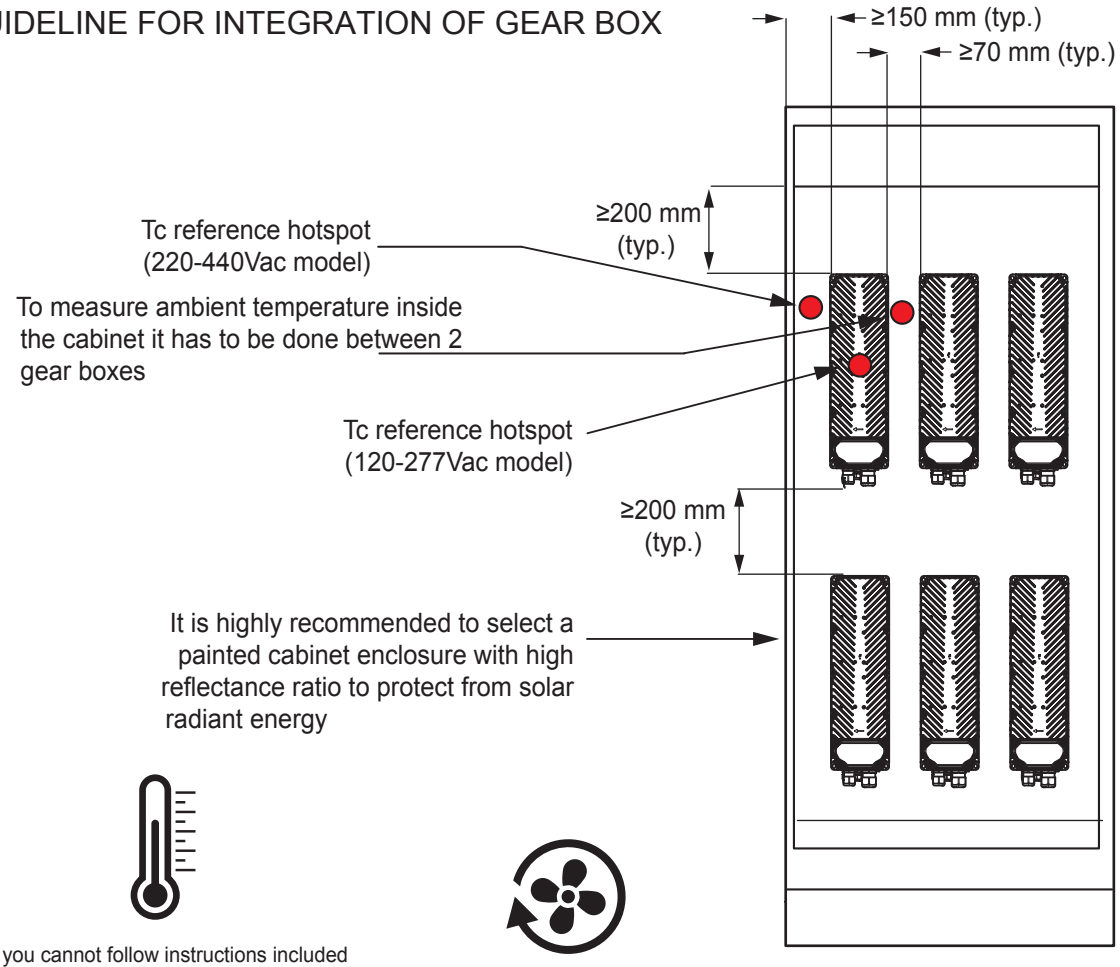

If you cannot follow instructions included in previous section regarding gear box integration, you have to measure Tc reference point taking into consideration that measures must be down to Tc_max

396L (1500W - 120-277Vac)

Tc Reference at Max Ambient			
Position	Horizontal	Vertical	Side
Mounting		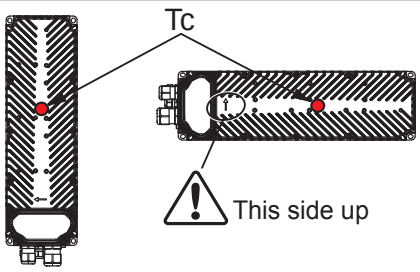	
120Vac	70°C	65°C	70°C
230Vac	60°C	60°C	60°C
277Vac	55°C	55°C	55°C
Ambient Max	45°C	45°C	45°C

396L (1500W - 220-400Vac)

Tc Reference at Max Ambient			
Position	Horizontal	Vertical	Side
Mounting	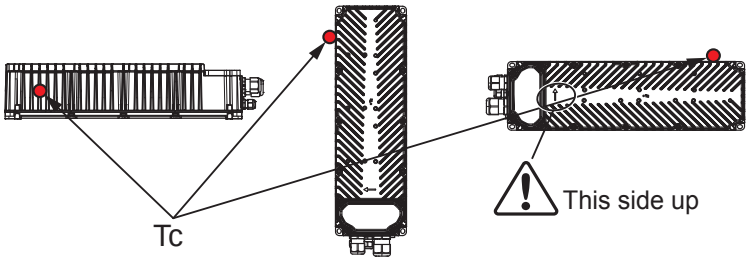		
230Vac	83°C	84°C	82°C
400Vac	66°C	68°C	66°C
Ambient Max	45°C	45°C	45°C

264L (1000W - 220-400Vac)

Tc Reference at Max Ambient			
Position	Horizontal	Vertical	Side
Mounting	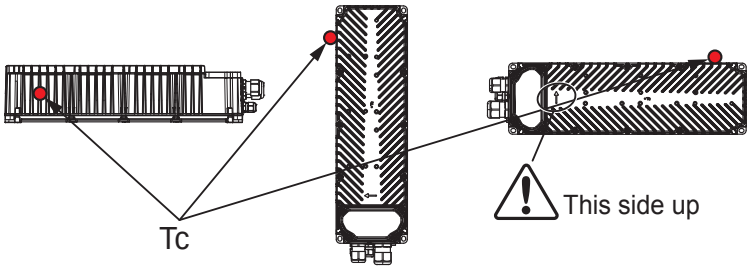		
230Vac	76°C	75°C	76°C
400Vac	64°C	62°C	63°C
Ambient Max	45°C	45°C	45°C

FRANCAIS

-Remplacer toute protection fissurée.
-Les luminaires classe II doivent être installés de façon à ce que la partie métallique ne soit pas en contact avec l'installation électrique connectée à la terre.

ATTENTION:Les luminaires classe I doivent être reliés à la terre.
-Ce luminaire fonctionne à une tension nominale qui doit être coupée avant toute intervention sur l'appareillage.
-Toute modification de cet appareil est interdite.
-Respecter la distance minimale par rapport aux objets éclairés définie par ce sigle.

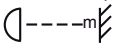

SVERIGE

-Ersätta alla spräckta skyddsplåtar.
-Klass II armaturer måste installeras så att nakna metalldelar i armaturen inte är i kontakt med någon elektrisk installation,kopplad till en skyddledare.

VARNING:Klass I armaturer måste vara jordade.
-Denna armatur fungerar med högspänning som måste vara frånslagen fore ingripande i driftdonen.
-Alla ändringar i denna armatur är förbjuden.

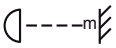

ITALIANO

-Sostituire sempre tutte le protezioni danneggiate.
-Gli apparecchi in classe II devono essere installati in modo che le parti metalliche non siano in contatto con apparati elettrici collegati a terra.
ATTENZIONE:Gli apparecchi in class I devono essere collegati a terra.
-Questo apparecchio funziona a tensione nominale,questa deve essere interrotta prima di ogni intervento sul gruppo di alimentazione.
-Ogni modifica dell' apparechio à proibita.

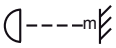

ENGLISH

-Replace any cracked protective shield.
-Class II luminaires must be installed so that exposed metal work of the luminaire is not in contact with any part of the electrical installation connected to a protective conductor.
WARNING:Class I luminaires must be earthed.
-This luminaire operates at mains voltage which must be switched off before intervention in control gear.
-Any modification to this luminaire is forbidden.
-Lighted objects nearer than the minimal distance in the is forbidden.

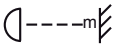

DEUTSCH

-Ersetze jede gebrochene Schutzscheibe.
-Schutzklasse II Leuchten müssen so installiert werden,daß berührbare Metallteile nich mit einem,an dem Schutzleiter angeschlossenen Teil der elektrischen Installation in Kontakt kommen können.
ACHTUNG:Schutzklasse I Leuchten müssen geerdet sein.
-Diese Leuchte wird mit Netzspannung betrieben.Bevor Eingriffe am Vorschaltgerät vorgenommen werden sowie vor Wartung und Installation,ist die Versorgungsspannung abzuschalten.
-Jede Änderung an dieser Leuchte ist verboten.

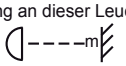

SUOMI

-Rikkoontunut suojalasi vaihdettava välittömästi uutsen vastaavaan.
-Asennettaessa suojausluokan II valaisinta on peruseristetyn johdon ja kosketeltavien metalliosien välinen kosketus tehokkaasti eristettävä.
VAROITUS: Suojausluokan I valaisin täytyy maadoittaa.
-Verkkojännite on kytkettävä pois ennen valaisimen huoltotoimenpiteitä.
-Valaisimen rakennetta el saa muuttaa.

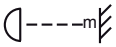

Thorn Lighting is constantly developing and improving its products. The right is reserved to change specifications without prior notification or public announcement.

© Thorn Lighting